Snug Centre - Radiator & UFH Wiring Diagram

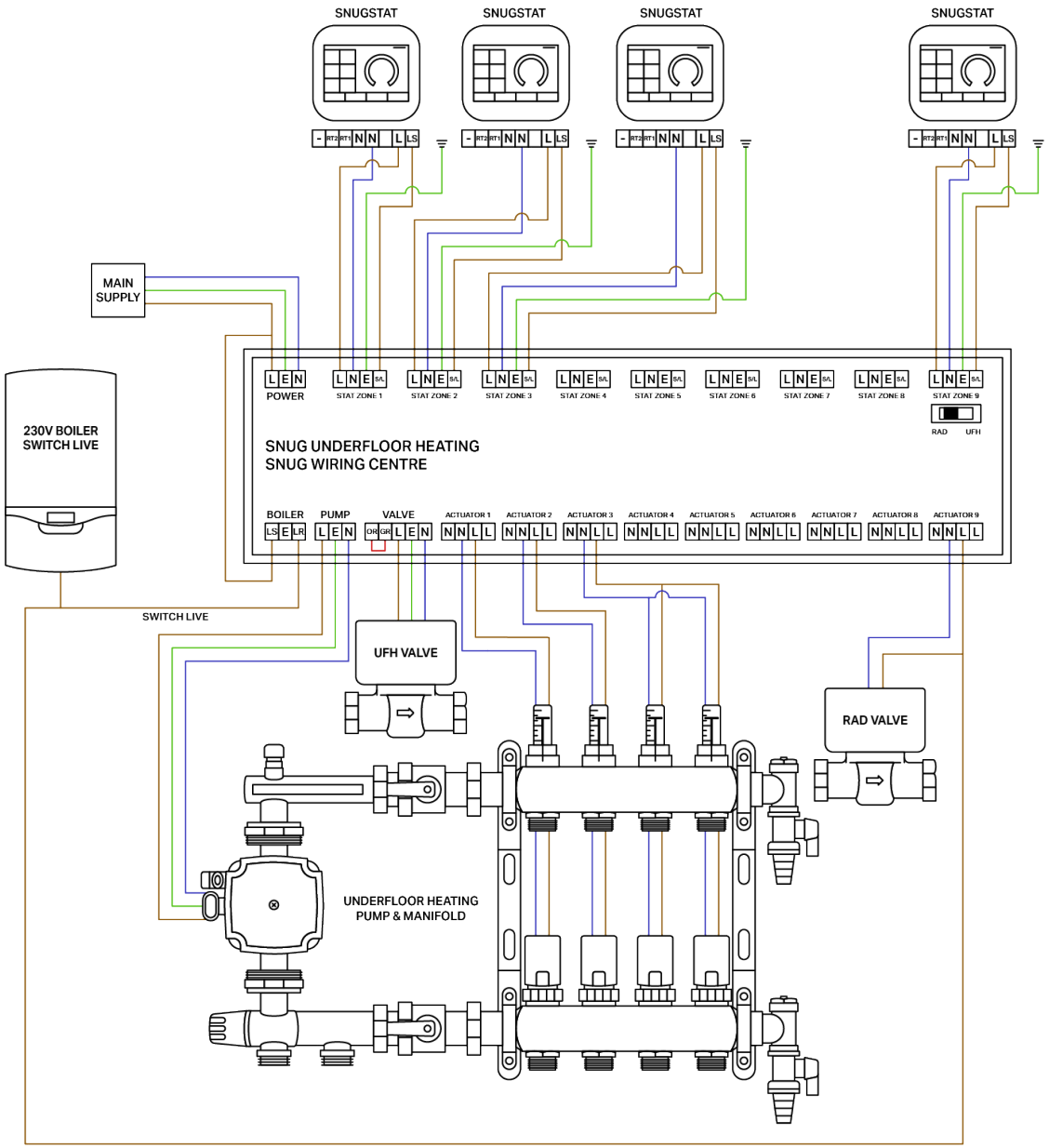

- Live
- Earth
- Neutral
- Gray
- Orange